SIEMENS
Ingenuity for life

Marine

INEOS TEAM UK

Reducing optimization time from a day to an hour

Product

Simcenter

Business challenges

Adapt to changing rules and yacht types

Choose the proper engineering direction for the design

Understand cross-disciplinary tradeoffs

Keys to success

Implemented Simcenter 3D for efficient processes for developing refined local models from global models

Efficiently pre- and postprocess simulation models

Perform structural analysis of hull and other structural components using Simcenter Nastran

Optimize laminate composite structural elements using OptiAssist for Simcenter 3D

Results

Reduced optimization time from a day to an hour

Rapidly evaluated and compared different design schemes

Developed optimal ply shapes and laminate schemes

Efficiently handled multiple loading requirements of components and assemblies

Simcenter 3D and OptiAssist enable efficient analysis and optimization of composites designs

The world's oldest international sports trophy

The America's Cup is the oldest international sports trophy in the world and the most expensive to win. It is a competing platform where the most advanced marine technologies, strategic decision-making and sailing skills all meet in the dramatic performance of flying racing yachts. The AC75 class rule, which defines the parameters within which teams can design an eligible yacht to compete in the next Cup, has introduced some groundbreaking regulations. Not only has the type of craft changed dramatically, from multihull catamaran to fixed configuration monohull, but new limitations were imposed on prototyping and physical testing, compelling teams to fully rely on a digital twin to develop their boats.

Led by Sir Ben Ainslie, a previous America's Cup winner and the most successful Olympic sailor of all time, INEOS TEAM UK was formed in 2018 to bring the America's Cup home to Britain for the first time.

A dramatically different design

Class rules for the 36th America's Cup of 2021, announced in March 2018, introduced a dramatic change in design. "These are entirely new boats, the AC75 foiling monohull," says Dave Jonson, Team Leader - Structures at INEOS TEAM UK. "It's a large

"The Siemens toolset, with NX on the CAD side and Simcenter on the analysis side makes that a lot easier to deal with."

Dave Jonson
Team Leader – Structures
INEOS TEAM UK

boat at 75 feet long that travels at high speeds. The challenge with developing something from the ground up is that just about everything needs to be invented. And the first boat we build needs to be competitive from the start." That leaves only three years from the time the rules were announced until the race begins, an extremely short time to conceptualize, design, manufacture and begin to race a completely new boat from scratch.

Compounding the challenge is that the rules for the 2021 America's Cup actually allow for lots of design freedom for the hull, sail, hydrofoil and aero and control systems. "With so much freedom, the challenge is choosing the right engineering direction for the different areas of design, such as aero, flow and structure," notes Jonson. In other words, with such a limited amount of time, INEOS engineers face a challenge to determine what will be the right engineering and design path to take before working out the details. With so many possible directions to go, they must determine the best path that won't lead to a time-draining dead end.

Simulation and optimization for structural performance

Jonson's structures team is responsible for all structural aspects of the yacht, including defining load cases, performing structural simulation, conducting physical testing and monitoring loads when the boat is finally sailing. The team needs to consider structural performance for every piece of the design, starting with the hull at a global level, and then at the subassembly and component levels.

For racing boats, weight management is a fundamental aspect of the design process. The rules define a basic weight budget split between the major parts of the boat. The competing teams then decide how to allocate the weight in the various areas while still conforming to the basic requirements. Weight distribution is critical to the performance of the yacht, and a lightweight structure also means there is more weight to spend in other areas and systems. How weight is managed and distributed through the yacht greatly impacts how it performs and maneuvers.

"Simulation is absolutely playing a key role in developing the boats. The more concepts that we can cycle through and evaluate, the more value that adds."

Dave Jonson
Team Leader – Structures
INEOS TEAM UK

"Simcenter 3D assembly modeling lets us easily swap out different components in the global model, which helps us analyze different strategies. Simcenter 3D has powerful tools for transferring boundary conditions between the global model and the local model."

Dave Jonson
Team Leader – Structures
INEOS TEAM UK

Much of the structure is made of lightweight yet strong laminate composite materials, and one of the advantages of using laminate composites is the flexibility to design the material to meet specific functional performance objectives. But the complexity of options for designing the right composite material – number of ply layups, orientations and thicknesses – make it challenging for engineers to determine the right concept direction. "Simulation is absolutely playing a key role in developing the boats," says Jonson. "The more concepts that we can cycle through and evaluate, the more value that adds." To accomplish this, INEOS TEAM UK turned to Simcenter™ 3D software, NX™ software and Simcenter™ Nastran® software, part of the Xcelerator™ portfolio of solutions and services from Siemens Digital Industries Software. The team also relied on OptiAssist for Simcenter 3D, an add-on application from Siemens partner GRM Consulting, to unlock the power of structural optimization.

Simcenter 3D and OptiAssist for composites optimization

Simcenter 3D is a comprehensive, fully integrated computer-aided engineering (CAE) solution for addressing complex, multidisciplinary product engineering performance. Jonson's team can seamlessly transfer geometry from NX computer-aided design (CAD) into Simcenter 3D to efficiently edit and defeature geometry, create the finite element model, solve it using Simcenter™ NASTRAN® software, evaluate and animate results, and then quickly make any needed design changes and re-run the simulation to compare performance differences. "The ability to translate a model from one geometry to another is critical," notes Jonson. "The parameterization of the model space allows us to morph our models very quickly from one concept to another or to substitute in a new concept easily. The Siemens toolset, with NX on the CAD side and Simcenter on the analysis side makes that a lot easier to deal with," notes Jonson.

OptiAssist for Simcenter 3D works within the Simcenter 3D environment to optimize composite laminates, automatically developing ply shapes and identifying the most efficient orientations and number of plies. "OptiAssist allows us to define different laminates on the fly and zone models in a flexible way, which makes the process a lot quicker," says Jonson. "OptiAssist for Simcenter 3D ultimately automates the optimization process and frees the engineer from the manual task of iterating designs."

In addition to the seamless connection between design and simulation, Jonson cites Simcenter 3D's ability to efficiently move from global assembly models to subassembly and component models.

"Simcenter 3D assembly modeling lets us easily swap out different components in the global model, which helps us analyze different strategies," Jonson says. "Simcenter 3D

has powerful tools for transferring boundary conditions between the global model and the local model."

The primary benefit of easily moving from a global to a local model is that it allows INEOS TEAM UK engineers to develop the analyses in an efficient way. The global model is not overburdened with a lot of detail that would slow down run times, but on the other hand, the local model allows for both global and local loading to be considered for refined analysis at the component level.

Global level: optimization of hull stiffness

The hull is the predominant structure for the entire yacht, and hull stiffness is critical to the overall performance of the boat. It's no surprise that this was the initial focus for INEOS TEAM UK's structures team. For example, consider that optimal sailing performance is directly related to maintaining sail shape. The sail rig is attached to the hull so the stiffness of the hull directly influences the deflection of the rig and hence sail shape. Says Jonson, "You need to be cognizant of the different failure modes that can potentially manifest as you start pushing the weight down, so developing a high-fidelity finite element model at an early stage is key."

Jonson's team used OptiAssist with Simcenter 3D to determine candidate areas of the hull that would require hull reinforcement to meet strength requirements and to also maintain an efficient sail plan. Jonson's team was able to optimize ply thickness for reinforcing unidirectional plies within the structure to achieve the best performance-to-weight tradeoff.

Subassembly level: mast bulkhead structure

Moving down the chain to the substructures of the boat, the team considered the design for the mast bulkhead, part of the primary structure of the boat positioned under the mast to support it. The mast bulkhead is subjected to many large forces. These loads are primarily the result of the balancing of the righting moment of the yacht with the aerodynamic forces generated by the sail plan. The sails loads produce tension in the various rigging elements supporting the sails and the mast bulkhead is the primary structure connecting the hull with the mast. The goal was to minimize the mass of the mast bulkhead while still meeting all structural performance requirements without failing.

By using OptiAssist for Simcenter 3D, INEOS was able to develop laminate reinforcements in 25 iterations and identified optimal ply reinforcement distributions to meet specific stiffness and strength requirements.

Component level: drivetrain brackets

On a racing yacht, drive train refers to various functions like pumps and winches that are powered by the human sailors on board. At the component level, the drive train brackets support the shafts that the sailors will be cranking during the race, and they need withstand the forces being generated by the sailors without adding unneeded weight to the boat.

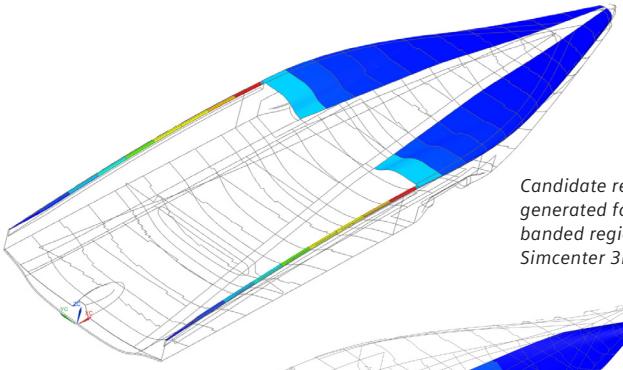

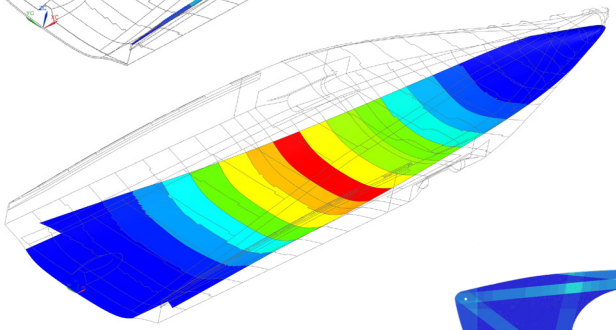

Candidate reinforcing plies automatically generated for deck and hull divided into banded regions using OptiAssist for Simcenter 3D.

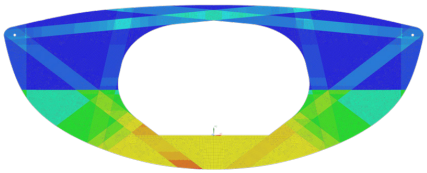

Identified optimal ply reinforcement distributions to meet specific stiffness and strength requirements.

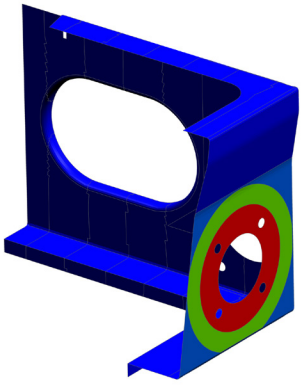

Optimal bracket thickness achieved in less than an hour for carbon fiber/epoxy quasi-isotropic laminate.

Solutions/Services

Simcenter 3D
siemens.com/simcenter3d

Simcenter Nastran
siemens.com/simcenter-nastran

OptiAssist for Simcenter 3D
www.opti-assist.com

Customer's primary business

INEOS TEAM UK is a commercial sporting team led by four-time Olympic gold medalist and 34th America's Cup winner, Sir Ben Ainslie. The team's long-term aim is to bring the prestigious America's Cup back to Britain, where the first challenge was held in 1851 off the Isle of Wight.
www.ineosteamuk.com

Customer location

Portsmouth
United Kingdom

The brackets are also designed from laminate composite materials, so Jonson's team can engineer and optimize the material for performance. In this specific case, they looked to optimize the thickness distribution of the quasi-isotropic laminate used for the bracket so as to minimize mass while still achieving strength, displacement and rotation requirements. The load cases applied to drive-train brackets can be complex, often requiring consideration of many different combinations of moments and load vectors. It is difficult to optimize the structure efficiently without the use of a tool that allows simultaneous consideration of all the load cases. If Jonson' team were to try to manually adjust the composite thickness, run the simulation, evaluate results and iterate, it would easily take a day or more. But by automating this process with OptiAssist for Simcenter 3D, Jonson was able to achieve the optimal design in less than an hour.

One shot

INEOS TEAM UK credits using simulation, especially efficient simulation, as early as possible in development to confirm that it will have a competitive boat as soon as it hits the water. Dave Jonson sums up the challenge best: "We only have one shot at this, and simulation is key to understanding many aspects of the boat."

"We only have one shot at this, and simulation is key to understanding many aspects of the boat."

Dave Jonson
Team Leader – Structures
INEOS TEAM UK

Siemens Digital Industries Software

Americas +1 314 264 8499
Europe +44 (0) 1276 413200
Asia-Pacific +852 2230 3333

siemens.com/software

82435-C4 10/20 A